REVISIONS				
ZONE	REV.	DESCRIPTION	DATE	APPROVED

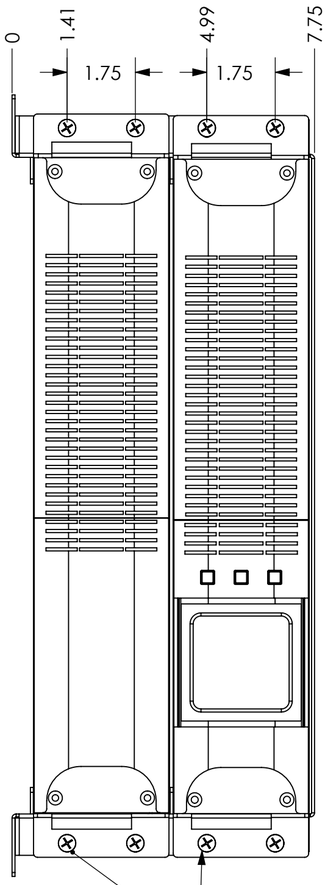

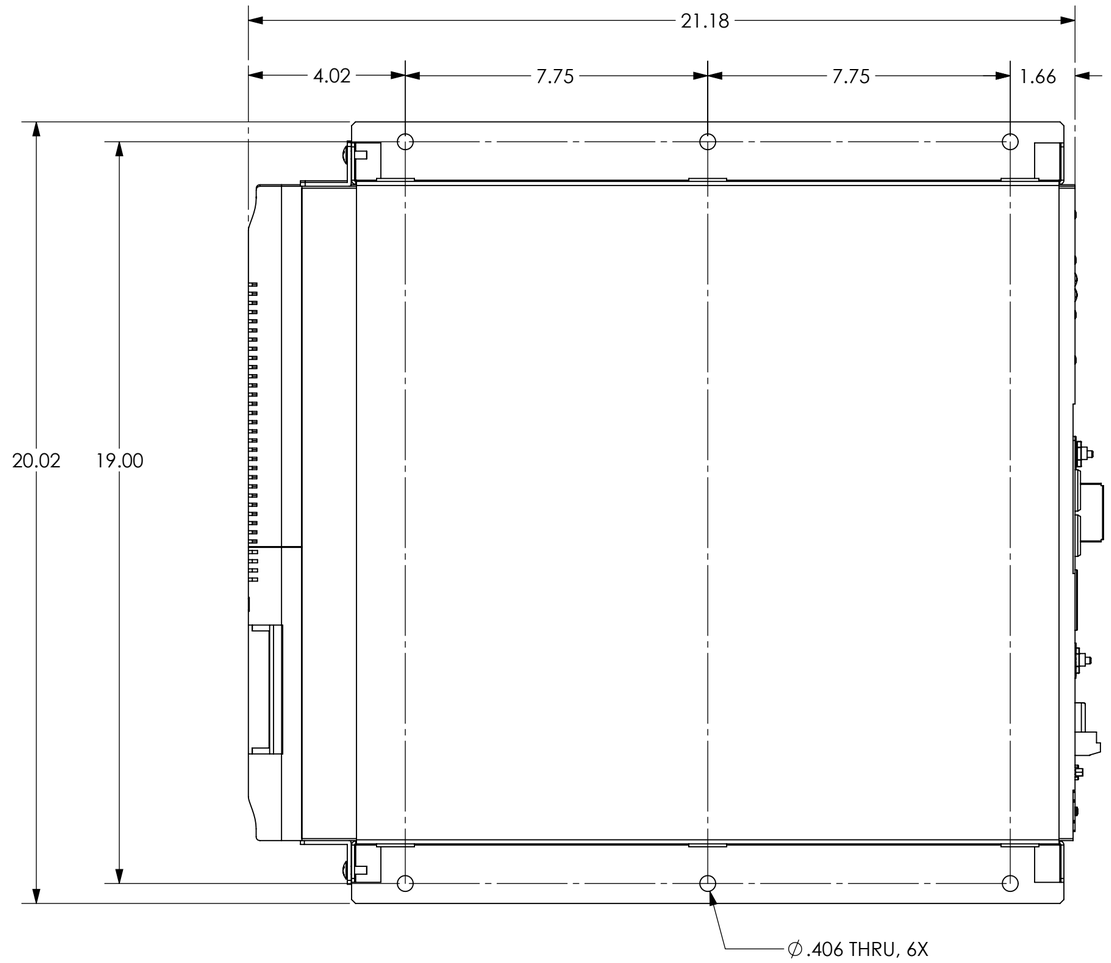

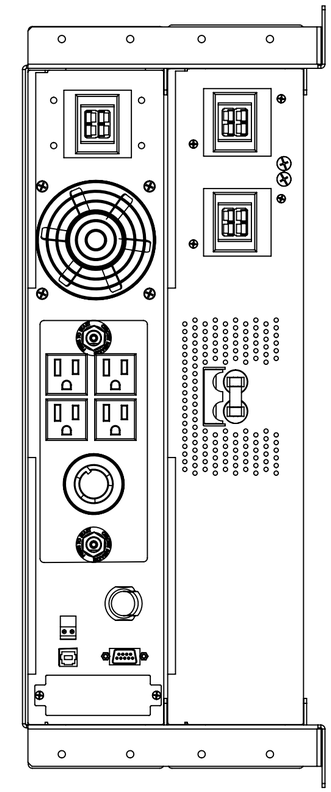

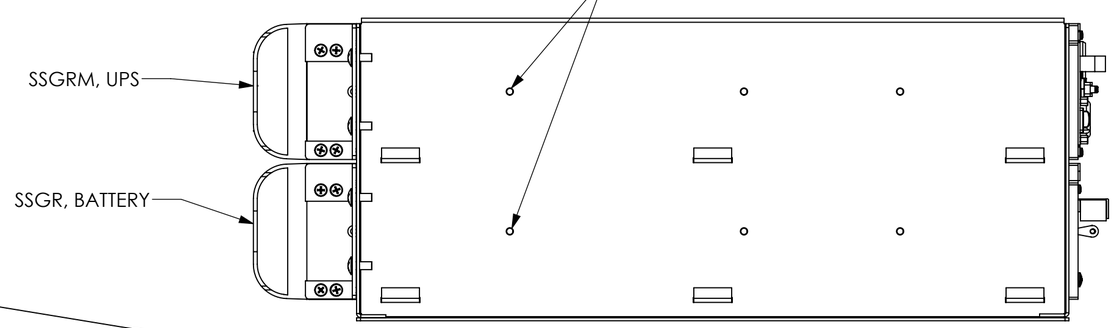

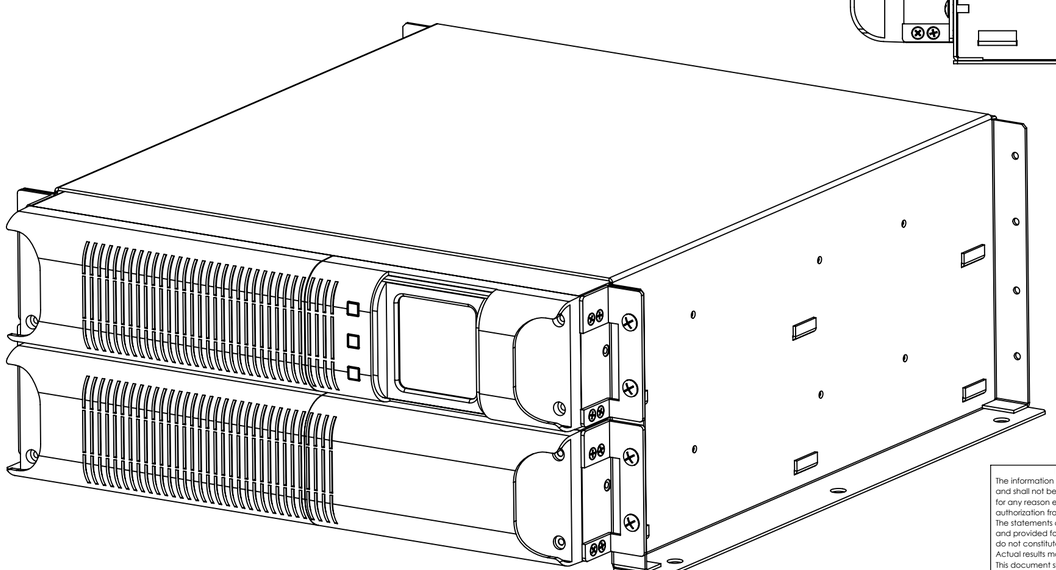

14 GAUGE (.075) COLD ROLLED STEEL.

POWDER COATED BLACK.

ITEM NO.	PART OR IDENTIFYING NO.	NOMENCLATURE OR DESCRIPTION	MATERIAL SPECIFICATION	QTY REQD

PARTS LIST

DIMENSIONS ARE IN INCHES
UNLESS OTHERWISE SPECIFIED
TOLERANCES ARE:
FRACTIONS .03 DECIMALS .02 .XX .010 .XXX ANGLES 1°
ALL ANGLES ARE 90°
UNLESS OTHERWISE SPECIFIED

MATERIAL

FINISH

DO NOT SCALE DRAWING

APPROVALS		DATE
MANAGEMENT		
DRAWN		
CHECKED		
RESP ENG		
MFG ENG		
QUAL ENG		

FALCON ELECTRIC INC.
5116 AZUSA CANYON RD. IRWINDALE, CA.

SIZE C | DWG. NO. | REV.
SCALE | CAD FILE: | SHEET 1 OF

PROPRIETARY AND CONFIDENTIAL
The information contained herein is proprietary to Falcon Electric, Inc. and shall not be reproduced or disclosed in whole or in part or used for any reason except when such user possesses direct, written authorization from Falcon Electric, Inc.
The statements contained herein are based on good faith assumptions and provided for general information purposes only. These statements do not constitute an offer, promise, warranty or guarantee of performance. Actual results may vary depending on certain events or conditions. This document should not be used or relied upon for any purpose other than that intended by Falcon Electric, Inc.

NEXT ASSY	USED ON
APPLICATION	