NOTES: UNLESS OTHERWISE SPECIFIED

1. INTERPRET DRAWING PER ANSI/ASME Y14.5
2. MATERIAL: SEE INDIVIDUAL COMPONENT PRINTS.
3. FINISH: SEE INDIVIDUAL COMPONENT PRINTS.
   PARTS SHALL BE CLEAN AND FREE OF FOREIGN MATTER.
   ALL DIMENSIONS APPLY AFTER PLATING.
4. ALL MATERIALS SHALL BE ROHS COMPLIANT.
5. PARTS SHALL BE PACKAGED TO PREVENT DAMAGE IN SHIPMENT AND HANDLING.
6. AN [X] DIM IDENTIFIES A KEY CHARACTERISTIC AND MAY REQUIRE Cpk STUDY AS OUTLINED IN PCTEL CQR. A COMPLETE 1ST ARTICLE LAYOUT SHALL BE SUBMITTED WITH INITIAL ORDER. A (REF) DIMENSION IS FOR INFORMATION PURPOSES ONLY AND NO TOLERANCE IS IMPLIED.
7. SUPPLIER SHALL REVIEW AND COMPLETE AND SIGN SUPPLIER INPUT/ PRINT ACCEPTANCE BLOCK.

REVISION HISTORY			
REV	DESCRIPTION	DATE	APPROVED
3	INITIAL DRAWING RELEASE (C14877)	09/05/14	ZV

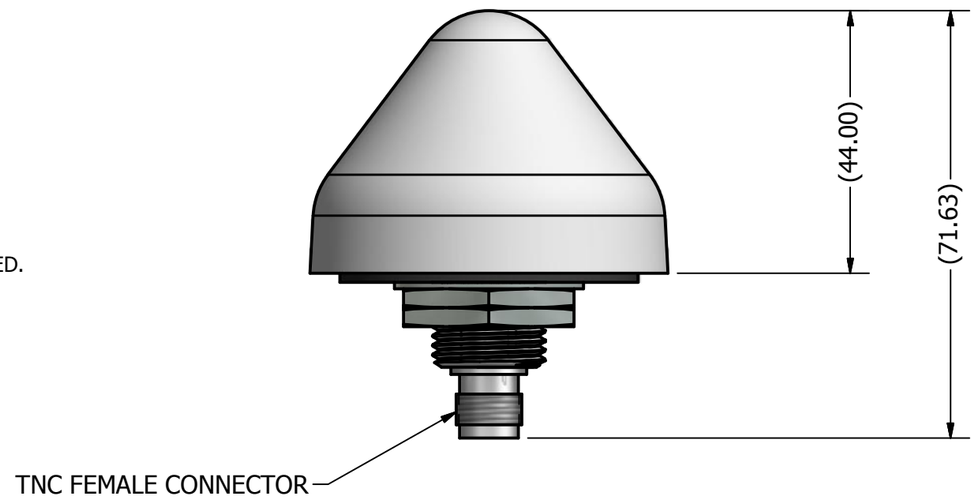

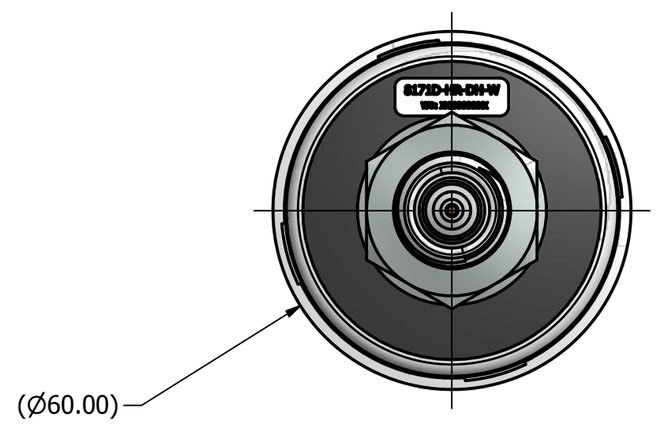

SUPPLIER PRINT ACCEPTANCE:

[ ] Accept drawing/specification: No changes needed:
[ ] This part is RoHS compliant
[ ] This part is REACH compliant
[ ] Accept drawing/specification. Notes/Mark-ups added
[ ] Cannot accept drawing/spec. Notes/Mark-ups added
Supplier Projected Outgoing Quality:

SIGMA LEVEL :_____or PPM:_____

Signature_____Date:_____

UNLESS OTHERWISE SPECIFIED DIMENSIONS ARE IN MILLIMETERS

FOR TOLERANCES NOT SPECIFIED USE:
[X mm ± 3 mm] [X.X mm ± .3 mm]
[X.XX mm ± .13 mm] ANGULAR± 1°

THIRD ANGLE PROJECTION

DRAWN ZV DATE 9/5/2014
CHECKED DATE
MATERIAL: SEE NOTE 2
FINISH: SEE NOTE 3

PCTEL PROPRIETARY DATA
THE INFORMATION AND/OR DRAWINGS CONTAINED IN THIS DOCUMENT IS CONFIDENTIAL AND PROPRIETARY TO PCTEL, INC. AND MAY NOT BE USED, REPRODUCED, IN WHOLE OR IN PART, OR MODIFIED IN ANY WAY WITHOUT THE EXPRESS WRITTEN PERMISSION OF AN AUTHORIZED REPRESENTATIVE OF PCTEL, INC.

PCTEL, INC.
471 BRIGHTON DRIVE
BLOOMINGDALE, IL 60108
PH. 630-372-6800
FAX. 630-372-8077

DESCRIPTION: GPS, 26dB, GNSS,HR, CONICAL PERM MNT, N MALE-MATTE NICKEL

DRAWING NO. ODD_8171D-HR-DH-W

SIZE B | SCALE 1:1 | SHEET 1 OF 1